DAM Ezekiel 25-17

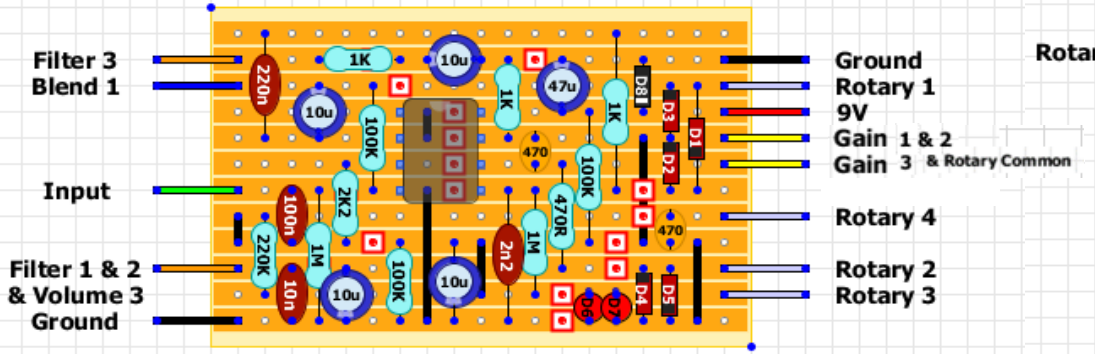

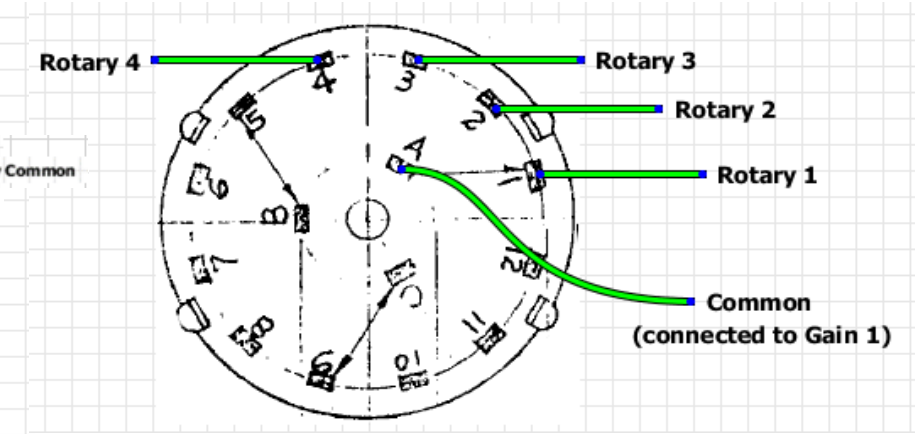

19 x 12

6 links, 17 cuts

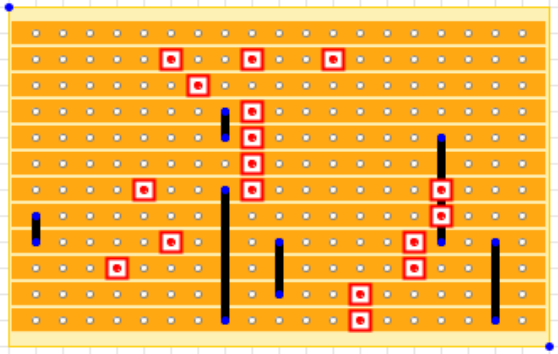

Alpha 3回路 2-3-4接点 シャフト：φ1/4"(18mm、ねじ部8mm) ブッシング径(ねじ部)：φ9mm ノンショート型 ストッパーワッシャーにて、2、3、4接点に変更可能です。 ※ ハンダ端子に変更となりました。	RSAL3P4T	¥350 数割			
1N34A	ゲルマニウム	DO-7	Sylvania 1N34A カラーコード	注文番号 1N34ASYL	¥180 数割

IC is JRC4562D, try JRC4558 or similar
Blend 100K Lin, Volume 100K Log, Gain 100K Lin, Filter 100K Lin
Blend 3 to Volume 2, Blend 2 to output, Volume 1 to ground
Rotary switch is 4 position 3 pole (only 1 pole used)
D1, D2 and D3 - Ge (try 1N34A)
D4 and D5 - Si (try 1N4148)
D6 and D7 - 3mm LED
D8 is 1N4001

DAM Ezekiel 25:17
IvIark - http://tagboardeffects.blogspot.com/

DRIVE
TREBLE
Diode Type
GERMANIUM
SILICON
LIGHT-EMITTING
BYPASS
DRY
WET
BLEND
DIFFERENTIAL AUDIO MANIFESTATIONZ
EZEKIEL 25:17 - full frequency overdrive
AMP.
INST.

DRIVE
Diode Type
GERMANIUM
SILICON
LIGHT-EMITTING
BYPASS
DRY
WET
BLEND
TREBLE
DIFFERENTIAL AUDIO MANIFE
EZEKIEL 25:17 - full frequency ov

ACTIVE
DRIVE
LEVEL
TREBLE
Diode Type
GERMANIUM
SILICON
LIGHT-EMITTING
BYPASS
DRY
WET
BLEND
DIFFERENTIAL AUDIO MANIFESTATIONZ
EZEKIEL 25:17 - full frequency overdrive
issue 0.2
AMP.
INST.

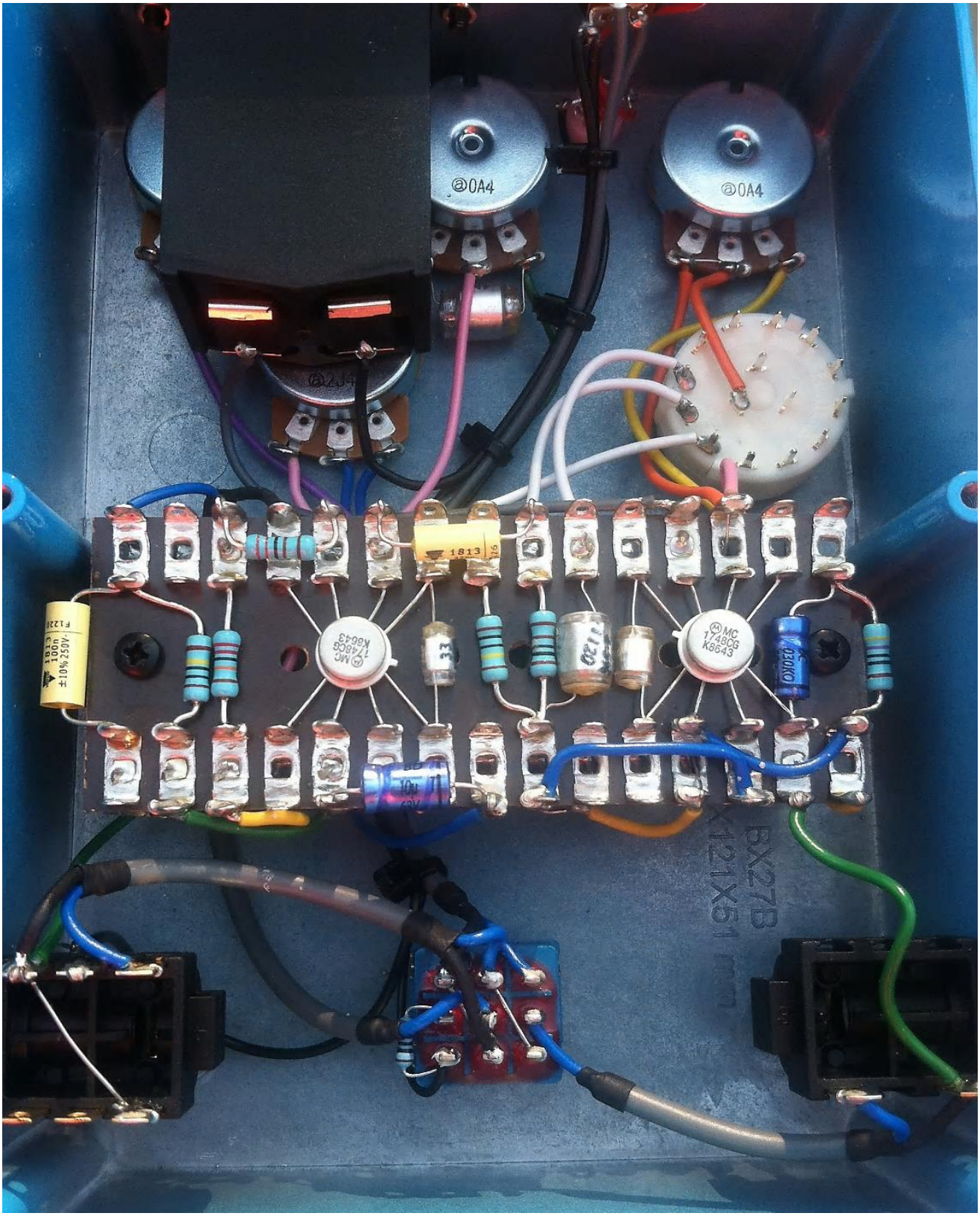
@0A4
@0A4
@234
1813
MC
7148CG
K8643
MC
7148CG
K8043
33
1130
100K
BX278
X121X51

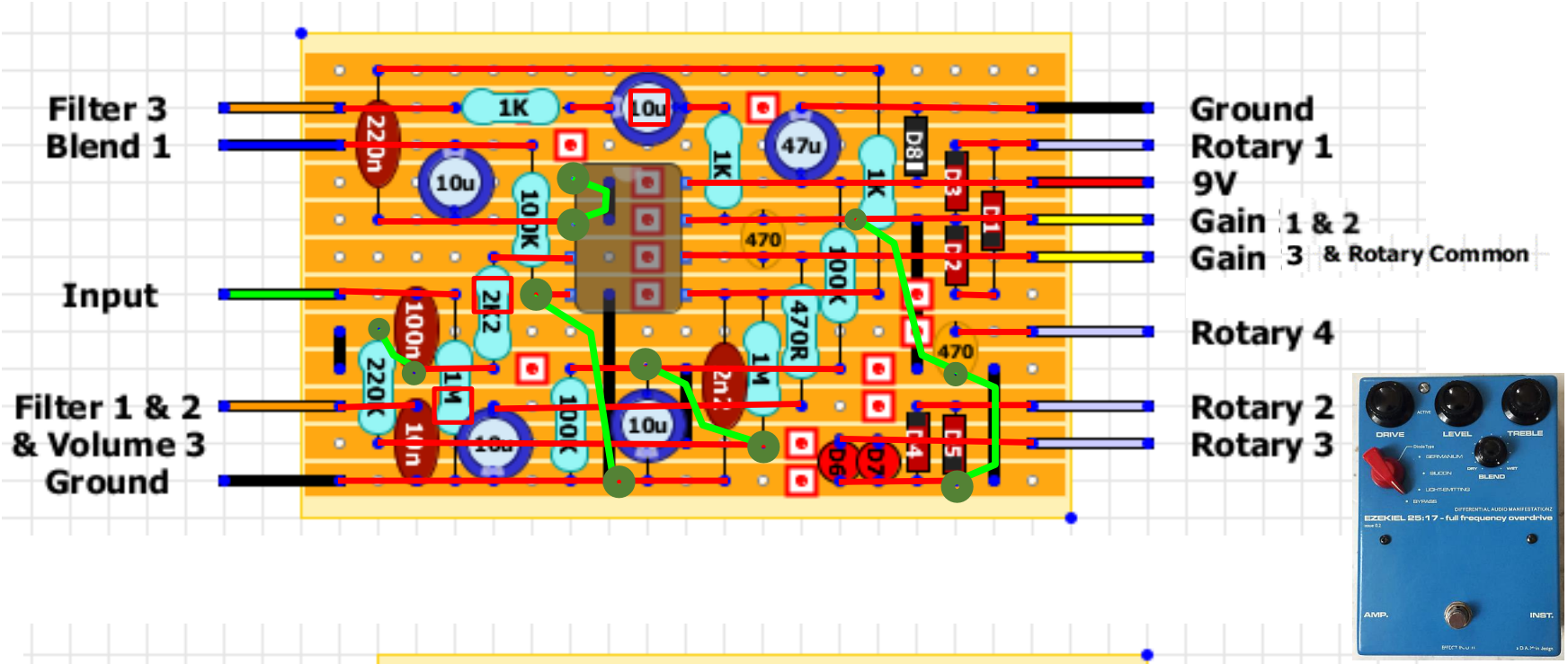
Filter 3
Blend 1
Input
Filter 1 & 2
& Volume 3
Ground
Ground
Rotary 1
9V
Gain 1 & 2
Gain 3 & Rotary Common
Rotary 4
Rotary 2
Rotary 3
DRIVE
LEVEL
TREBLE
BLEND
EZEKIEL 25:17 - full frequency overdrive
AMP.
INST.

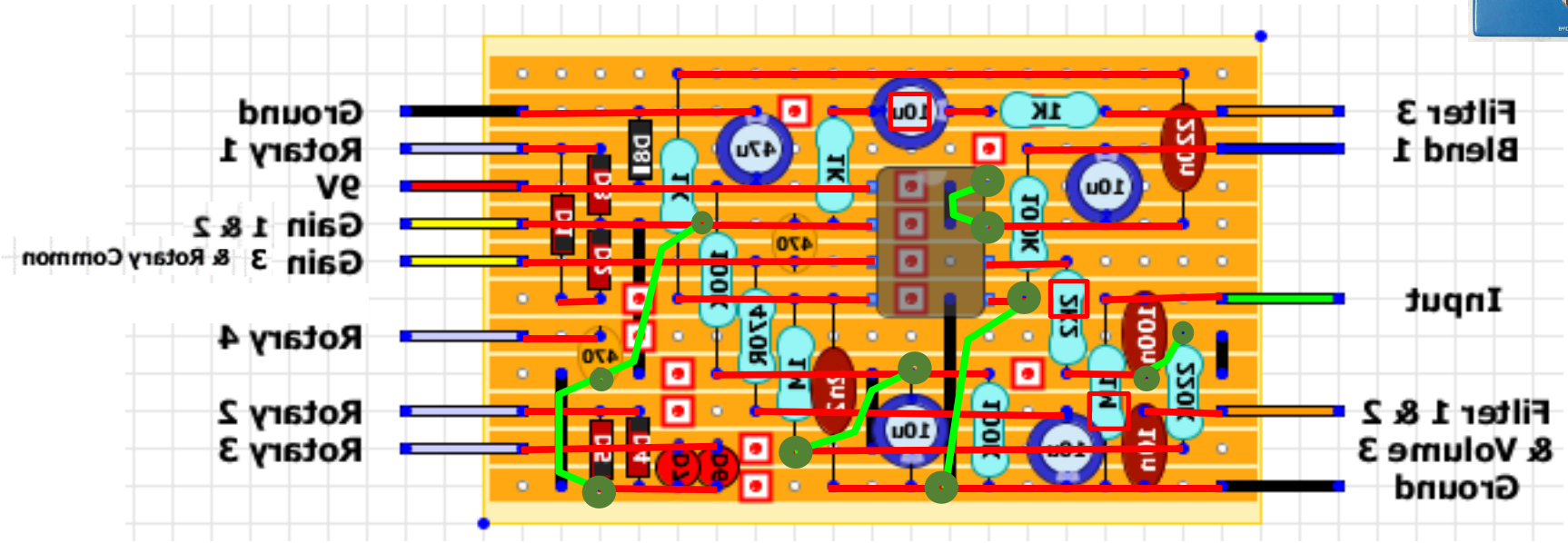
Ground
Rotary 1
9V
Gain 1 & 2
Gain 3 & Rotary Common
Rotary 4
Rotary 2
Rotary 3
Filter 3
Blend 1
Input
Filter 1 & 2
& Volume 3
Ground

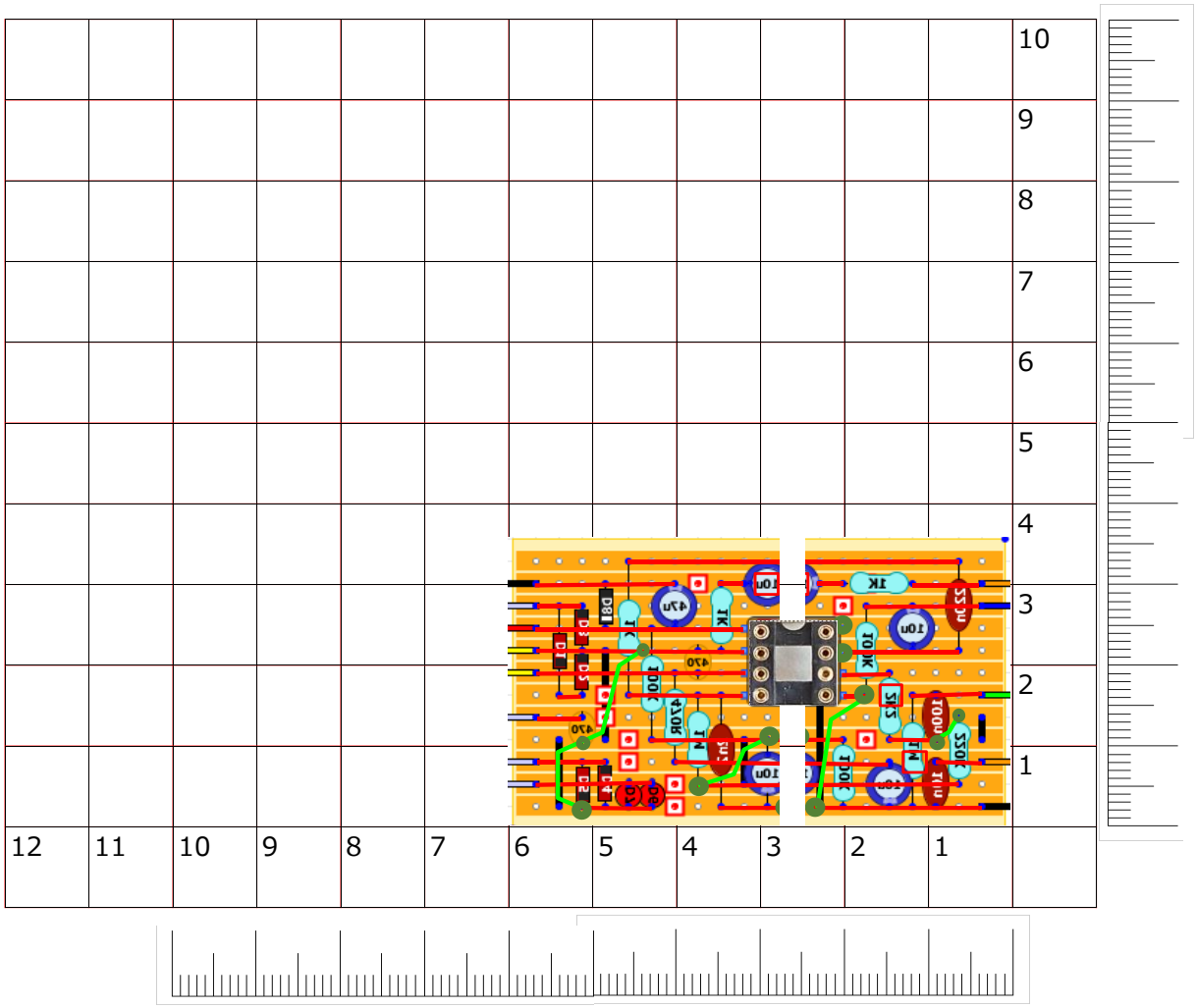

41pics=10mm

Actual size(実寸大)

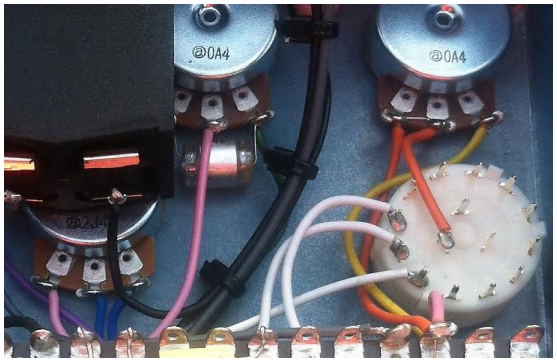

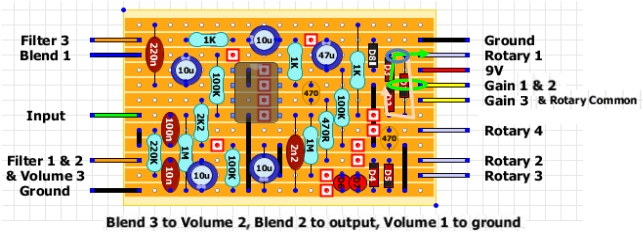
Filter 3
Blend 1
Input
Filter 1 & 2
& Volume 3
Ground
Ground
Rotary 1
9V
Gain 1 & 2
Gain 3 & Rotary Common
Rotary 4
Rotary 2
Rotary 3
Blend 3 to Volume 2, Blend 2 to output, Volume 1 to ground

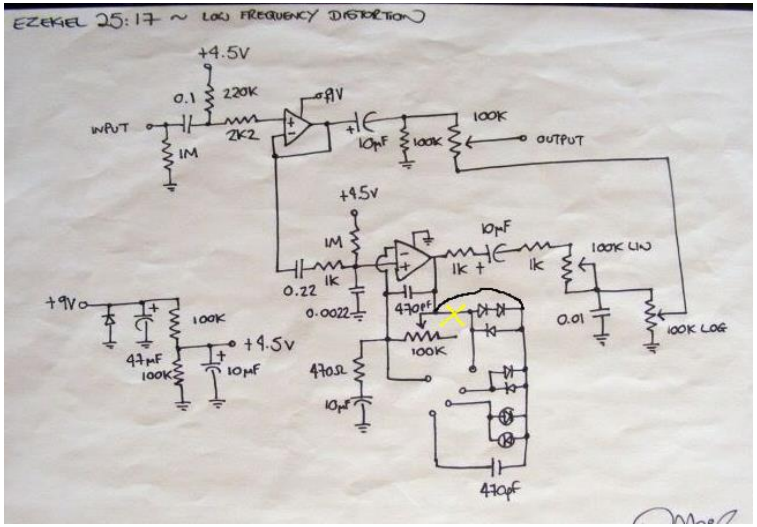
EZEKIEL 25:17 ~ LOW FREQUENCY DISTORTION
+4.5V
0.1
220K
INPUT
2K2
1M
10µF
100K
OUTPUT
+9V
100K LIN
100K LOG
470pF
0.01
0.22
0.0022
47µF
470Ω

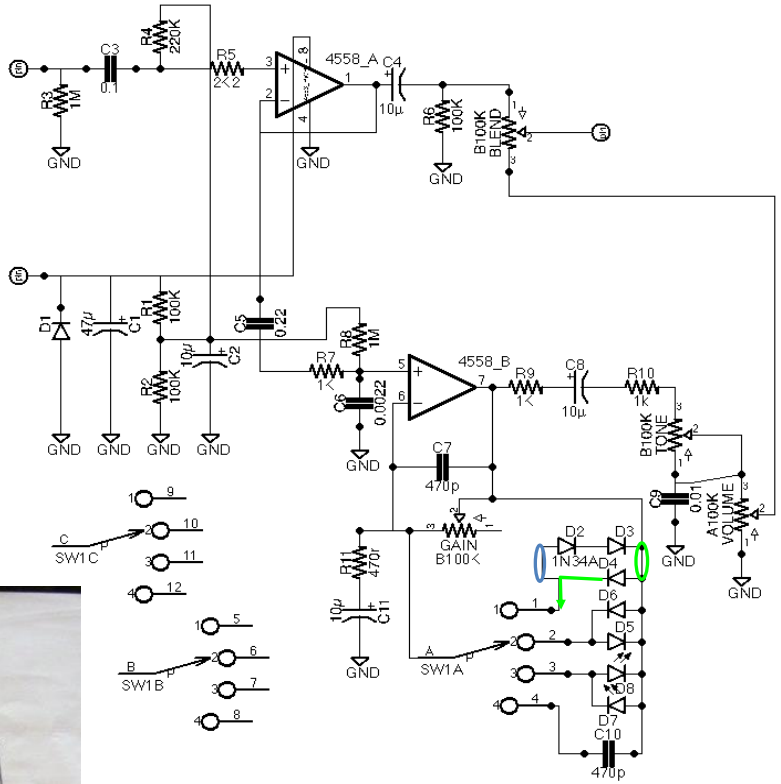
4558_A
4558_B
GND
SW1C
SW1B
SW1A
GAIN
B100K
TONE
VOLUME
A100K
1N34A

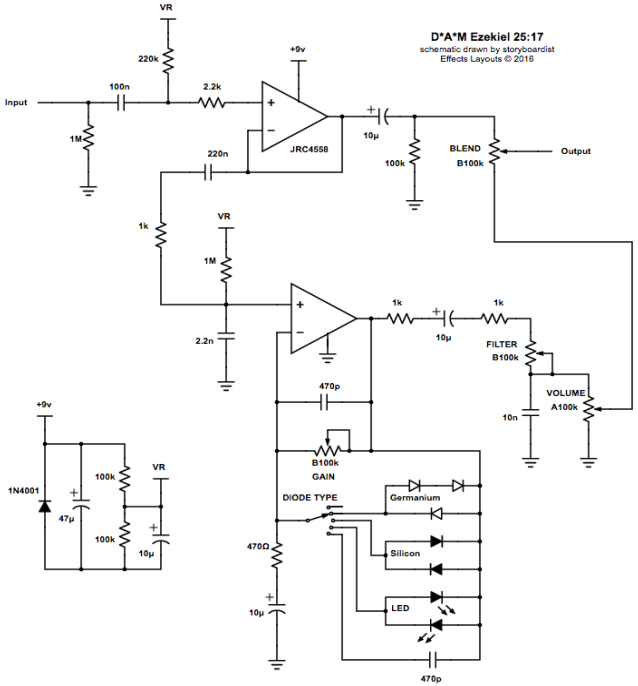
D*A*M Ezekiel 25:17
schematic drawn by storyboardist
Effects Layouts © 2016
Input
JRC4558
BLEND
B100k
Output
FILTER
B100k
VOLUME
A100k
GAIN
DIODE TYPE
Germanium
Silicon
LED
1N4001

ACTIVE
DRIVE
LEVEL
TREBLE
Diode Type
GERMANIUM
SILICON
LIGHT-EMITTING
BYPASS
DRY
WET
BLEND
DIFFERENTIAL AUDIO MANIFESTATIONZ
EZEKIEL 25:17 - full frequency overdrive
issue 0.2
AMP.
INST.
EFFECT IN/OUT
a D.A. Main design

ACTIVE
DRIVE
LEVEL
TREBLE
Diode Type
GERMANIUM
SILICON
LIGHT-EMITTING
BYPASS
DRY
WET
BLEND
DIFFERENTIAL AUDIO MANIFESTATIONZ
EZEKIEL 25:17 - full frequency overdrive
issue 0.2
AMP.
INST.
EFFECT IN/OUT
a D.A. Main design